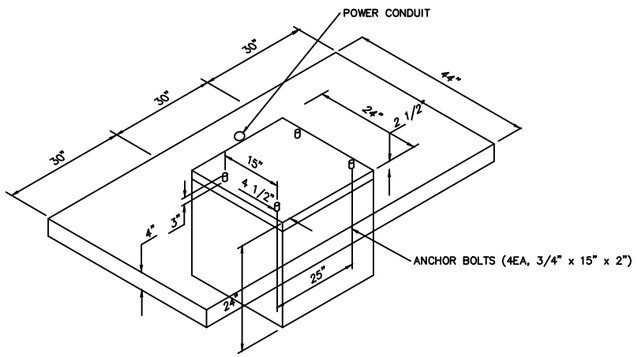

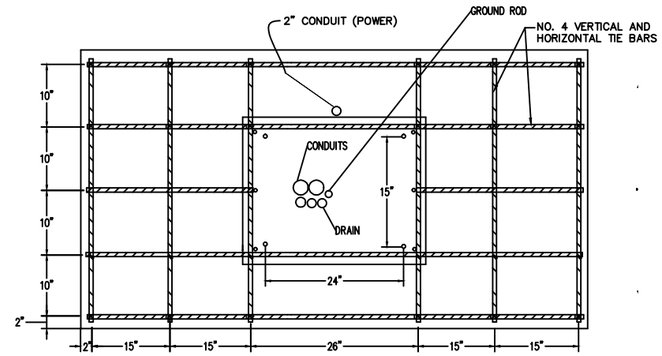

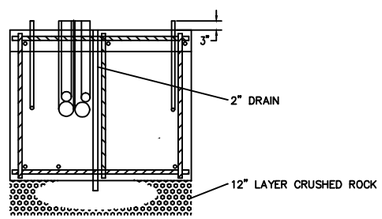

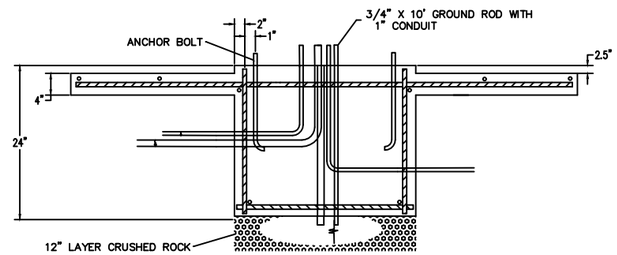

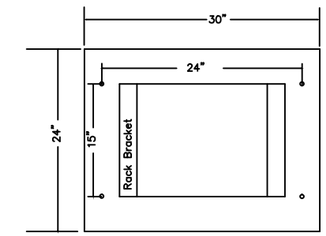

BASE PATTERN TYPE 332

NOTES:

1. TOP OF PAD TO BE SLOPED TO DRAIN.
2. NON-HARDENING DUCT SEALANT TO BE APPLIED TO CONDUIT ENTRANCES.
3. PROVIDE WATERTIGHT SEAL BETWEEN THE CONTROLLER CABINET AND THE CONCRETE PAD.
4. CONTROLLER PAD TO BE EXCAVATED AND FORMED TO THE DIMENSIONS SHOWN WITHOUT DISTURBING THE AREAS OF ADJACENT SUBGRADE.
5. THE ENGINEER IN CHARGE OF CONSTRUCTION SHALL DETERMINE THE ORIENTATION OF THE CONTROLLER PAD.
6. ALL CONDUITS AND BOLTS SHALL BE RIGIDLY INSTALLED BEFORE PLACEMENT OF CONCRETE.
7. ANCHOR BOLTS SHALL BE SPACED USING MANUFACTURED SUPPLIED TEMPLATE, CENTERED TO COINCIDE WITH THE CENTER OF THE BASE. TO ALLOW FOR CENTERING OF THE POWER CONTROL CABINET ON THE SIDE OF THE SIGNAL CONTROL BOX.

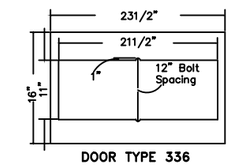

DOOR TYPE 336

TRAFFIC SIGNAL CONTROLLER PAD DETAILS

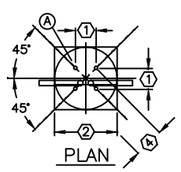

TYPE 'A' BASE

DIMENSIONS — DIMENSIONS BY MOUNTING HEIGHTS

NO.	ITEM	25'	30'	35'	40'
1	BOLT SPACING	7-3/8"	7-3/4"	8-1/8"	8-1/2"
2	MIN. DIAMETER OF FOUNDATION	21"	22"	23"	24"
3	DEPTH OF FOUNDATION	5'-0"	6'-0"	7'-0"	8'-0"
4	BOLT CIRCLE DIAMETER	10-1/2"	11"	11-1/2"	12"

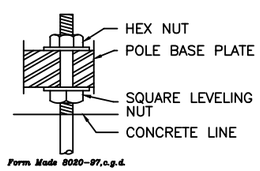

Form Made 8020-97,c.g.d.

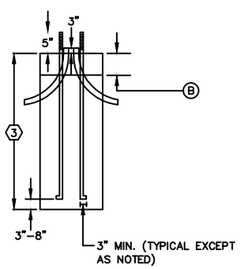

STREET LIGHT FOUNDATIONS

(A) ANCHOR BOLTS.

(B) 6" CAP TO BE POURED AFTER POLE IS ERECTED AND PLUMBED.

GENERAL NOTES FOR ALL BASES

1) ANCHOR BOLTS TO BE HOT-DIP GALVANIZED. (SEE SPECIFICATION.)
2) ANCHOR BOLTS TO BE HOT-DIP GALVANIZED. (SEE SPECIFICATION.)
3) BOTTOM ENDS OF ANCHOR BOLTS MUST HAVE 3" MINIMUM CONCRETE COVER.
4) USE BOLT POSITIONING JIF OF SUFFICIENT WEIGHT & STRENGTH TO MAINTAIN ACCURATE ANCHOR BOLT LOCATION DURING CONCRETE PLACEMENT.
5) CITY-AUTHORIZED INSPECTOR MUST INSPECT EACH EXCAVATION, WITH ALL FORMS, ANCHOR BOLTS, REINFORCING STEEL, CONDUIT, & CONDUIT PLUGS IN PLACE IMMEDIATELY PRIOR TO PLACING CONCRETE.
6) CONCRETE FOR FOUNDATIONS: MCIB AIR-ENTRAINED MIX NO. A-629-1/2-2.
7) FOUNDATIONS IN EARTH TO BE 1" ABOVE ANY ADJACENT EARTH & HAVE EDGES BEVELED.
8) FOR TYPE "A", TIE ANCHOR BOLTS NEAR THE BOTTOM. USE TWO #3 REBAR HOOPS SPACED 12", TWO #3 REBAR "U" 'S SPACED 12", OR TWO TURNS OF #3 REBAR SPIRAL WITH 12" PITCH.
9) EXPANSION JOINT TO BE USED WHERE PAVING ADJOINS FOUNDATION.
10) PLUG ALL CONDUIT OPENINGS WITH DUXSEAL OR EQUIVALENT BEFORE PLACING CONCRETE & AFTER CABLE INSTALLATION. SEE PLANS FOR NUMBER AND DIRECTION OF BENDS.
11) 6" CAP TO BE POURED AFTER POLE IS ERECTED AND PLUMBED.

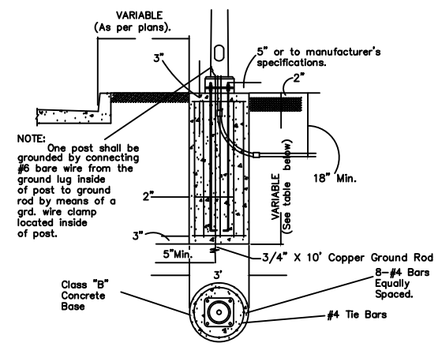

TYPICAL B8, B10, & B12

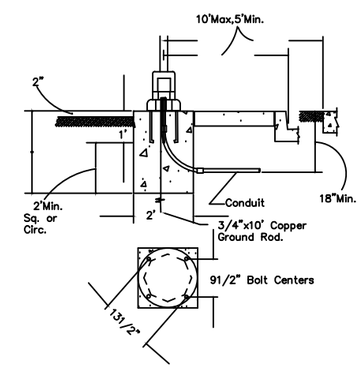

TYPE C

BASES

BASE TYPE	DEPTH	DIA.	ARM LENGTH	CONC. IN C.Y.
B8	8 FT.	3 FT.	Up to 28 FT.	2.09
B10	10 FT.	3 FT.	29 FT. to 35 FT.	2.61
B12	12 FT.	3 FT.	36 FT. to 46 FT.	3.14
B-Special	>12 FT.	>=3 FT.	> 46 FT.	VARIES

KANSAS CITY, MISSOURI
PUBLIC WORKS DEPARTMENT
TRANSPORTATION PLANNING AND DESIGN SECTION

CONCRETE BASES

FEDERAL PROJ. NO. _____

PROJ. NO. _____

DRWN BY D.BUCHANAN S.VEERAMALLU | DATE 09/10/12 | SCALE N.T.S.

DSGN BY S. AKULA | CHKD BY S. AKULA

Sheet ____ of ____ | TCD-0-5